741 TESTER

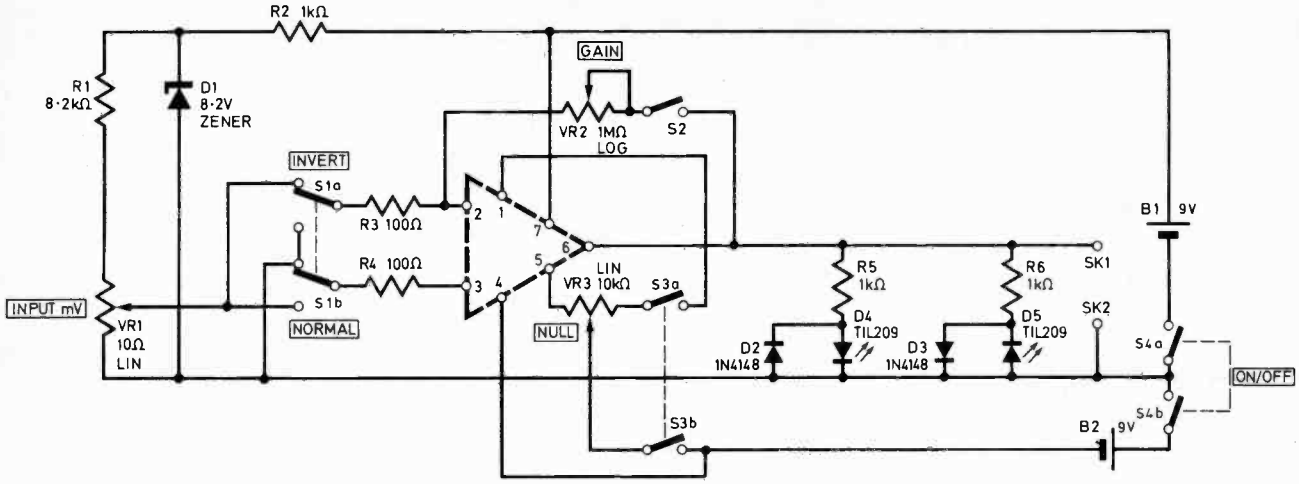

I RECENTLY acquired a bulk purchase of i.c.s which contained many 741 series op-amps said to be untested. Looking through articles for the past couple of years failed to give any circuits for this purpose (although digital i.c. testers and transistor testers were fairly numerous). I therefore built the tester illustrated in Fig. 1, a simple circuit which has proved quick and easy to use as well as being relatively cheap.

The input is tapped off a low impedance source, VR1 which can supply 0–10mV, and this was read off by using a knob with a skirt labelled 0–10 directly. This is supplied via switch S1 to either the inverting or normal input of the 8 pin d.i.l. socket and the gain set using VR2. With the values used for VR2, R3 and R4, the gain is continuously variable from around unity to 10,000, and the use of a log potentiometer enable gains up to 1,000 to be read off with fairly good resolution. The gain scale was in fact calibrated by using an ohmeter, marking off the 10kΩ, 50kΩ 100kΩ, 500kΩ and 1MΩ points and then labelling these points directly with the gain figures 100 to 10,000.

The output from pin 6 of the socket is taken across two l.e.d.s which on the panel are labelled normal for D4 and invert for D5, and this gives instant indication of the correct mode of operation of the i.c. under test. The diodes D2 and D3 limit the reverse voltage across the l.e.d.s to 0·6V.

The brightness of the l.e.d.s also should vary as both VR1 and VR2 are changed, and sockets are provided so that the output can be measured directly with a multimeter if more accurate data is required.

Finally S3 is used to switch in the offset null potentiometer VR3 which should cause the l.e.d.s to change over as it is slowly rotated.

When a "good" 741 i.c. was used to test the device, it was found that the open loop gain, i.e. with S2 open, gave a voltage saving of ±7·5V whereas the rails were ±9V, but this is probably due to the combined effect of R5 and R6 which give a load of about 500Ω compared to the output impedance of the i.c. of around 150Ω. However, this should not prove a problem during testing.

Using the 741 tester, it was possible to very quickly check all the main parameters on over forty 741 op-amps. It was unfortunate for me that only two proved fully functional!

T. Smales,
Wrexham,
Clwyd.
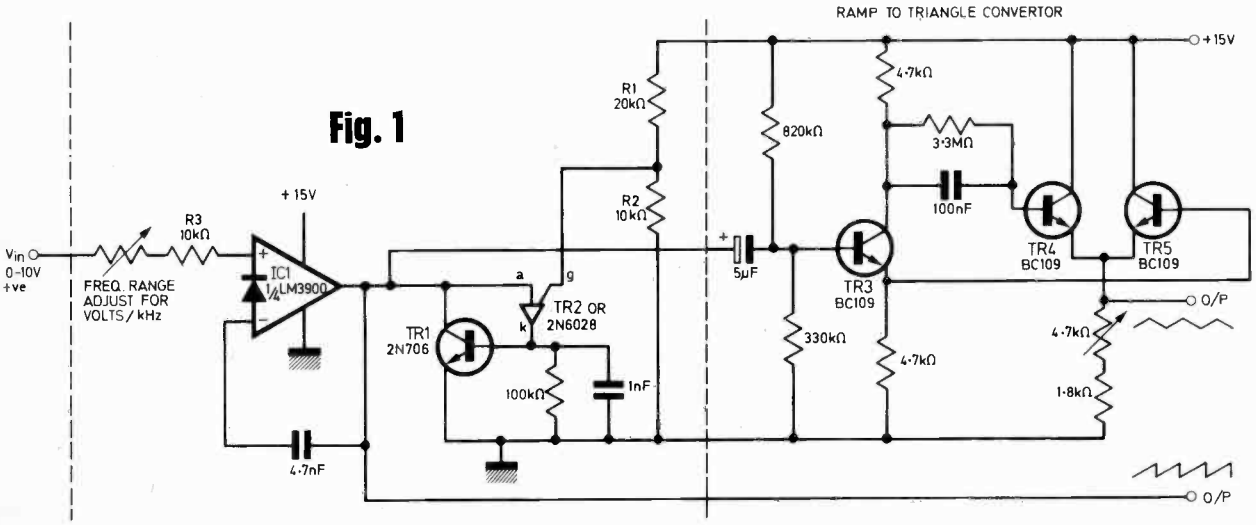
VERSATILE V.C.O.