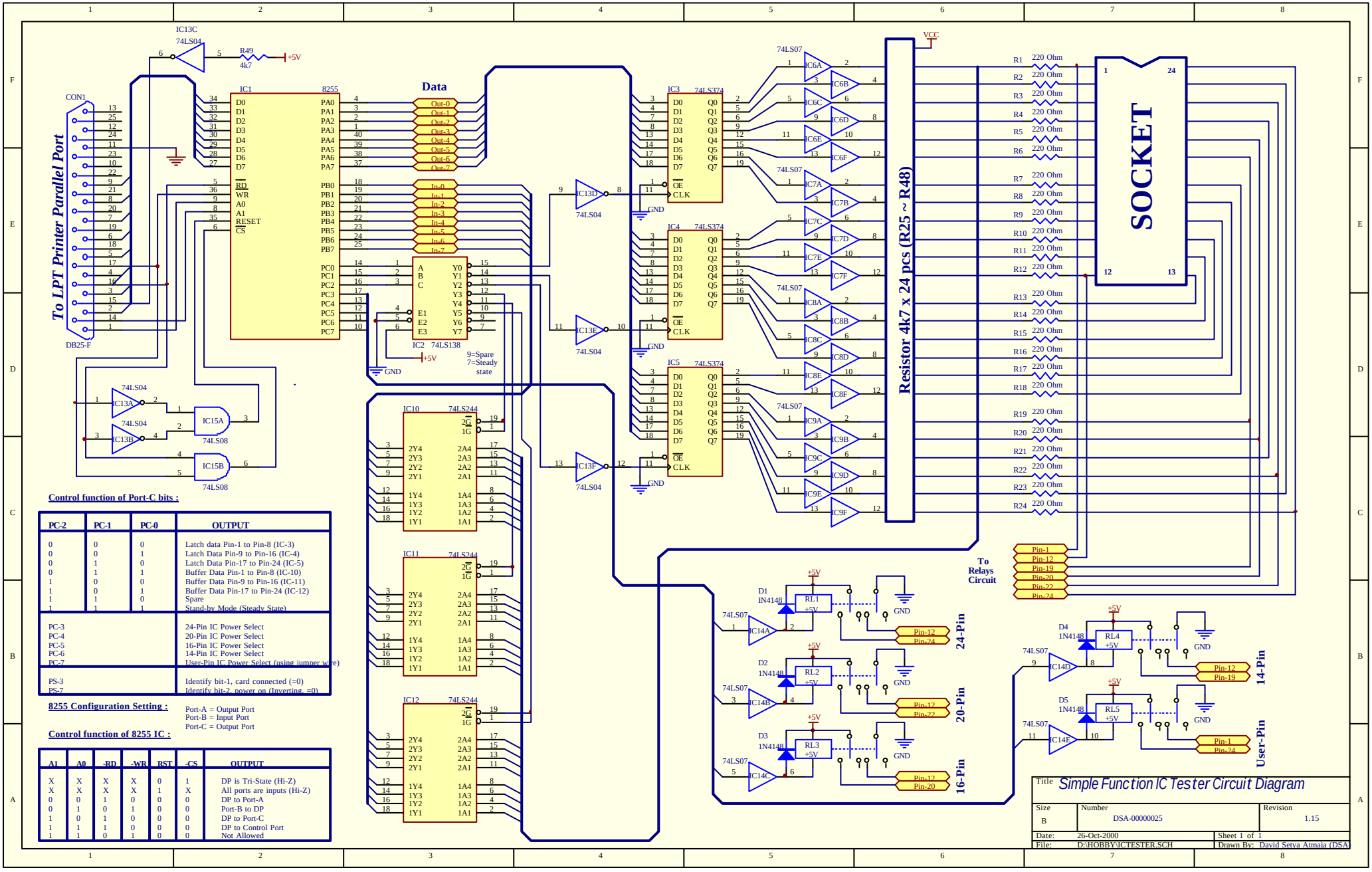

Control function of Port-C bits :

PC-2	PC-1	PC-0	OUTPUT
0	0	0	Latch data Pin-1 to Pin-8 (IC-3)
0	0	1	Latch Data Pin-9 to Pin-16 (IC-4)
0	1	0	Latch Data Pin-17 to Pin-24 (IC-5)
0	1	1	Buffer Data Pin-1 to Pin-8 (IC-10)
1	0	0	Buffer Data Pin-9 to Pin-16 (IC-11)
1	0	1	Buffer Data Pin-17 to Pin-24 (IC-12)
1	1	0	Spare
1	1	1	Stand-by Mode (Steady State)
PC-3			24-Pin IC Power Select
PC-4			20-Pin IC Power Select
PC-5			16-Pin IC Power Select
PC-6			14-Pin IC Power Select
PC-7			User-Pin IC Power Select (using jumper wire)
PS-3			Identify bit-1, card connected (=0)
PS-7			Identify bit-2, power on (Inverting, =0)

8255 Configuration Setting :

Port-A = Output Port
Port-B = Input Port
Port-C = Output Port

Control function of 8255 IC :

A1	A0	-RD	-WR	RST	-CS	OUTPUT
X	X	X	X	0	1	DP is Tri-State (Hi-Z)
X	X	X	X	1	X	All ports are inputs (Hi-Z)
0	0	1	0	0	0	DP to Port-A
0	1	0	1	0	0	Port-B to DP
1	0	1	0	0	0	DP to Port-C
1	1	1	0	0	0	DP to Control Port
1	1	0	1	0	0	Not Allowed

Title	Simple Function IC Tester Circuit Diagram	
Size B	Number DSA-00000025	Revision 1.15
Date: 26-Oct-2000	Sheet 1 of 1	
File: D:\HOBBY\ICTESTER.SCH	Drawn By: David Setya Atmaja (DSA)	